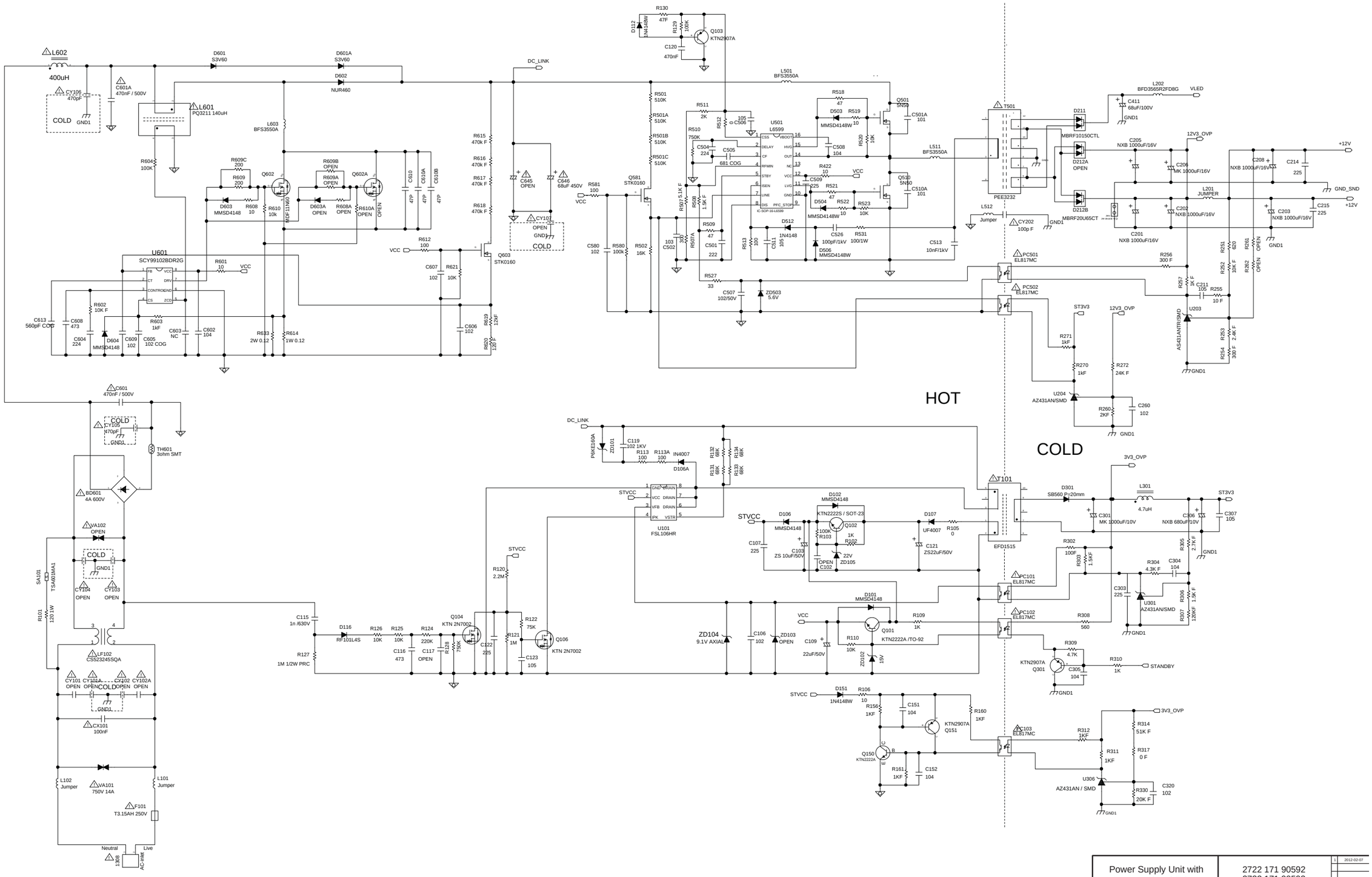

Power Supply Unit with Integrated Led Driver	2722 171 90592 2722 171 90593 PLDF-P104A	1 2012-02-07

BOOST

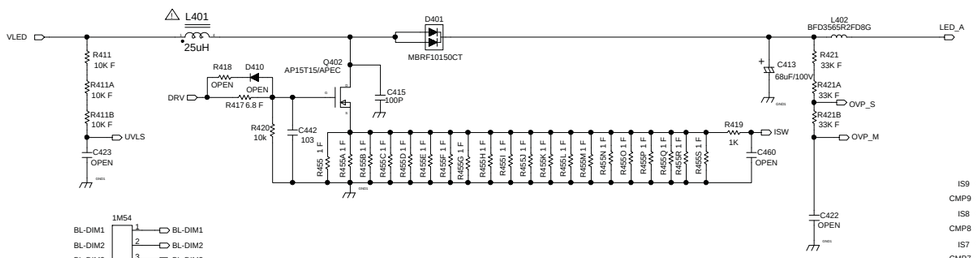

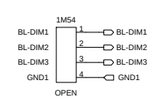

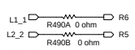

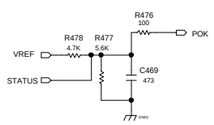

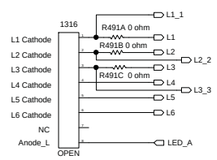

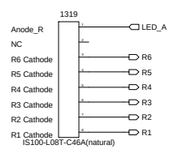

MASTER

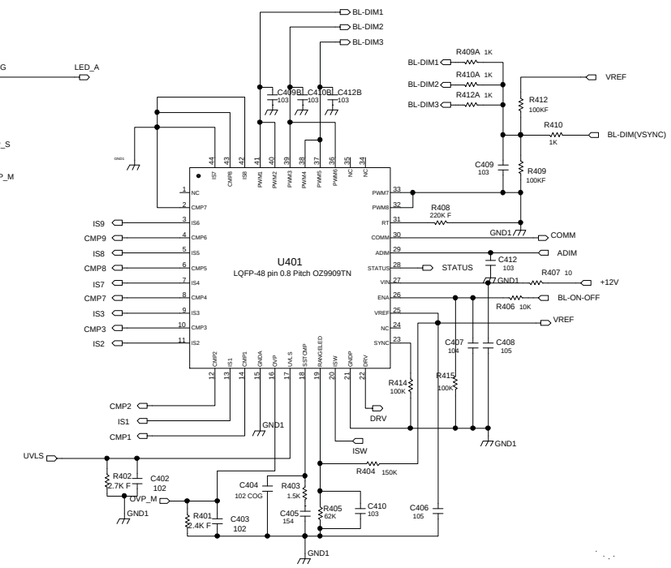

SLAVE

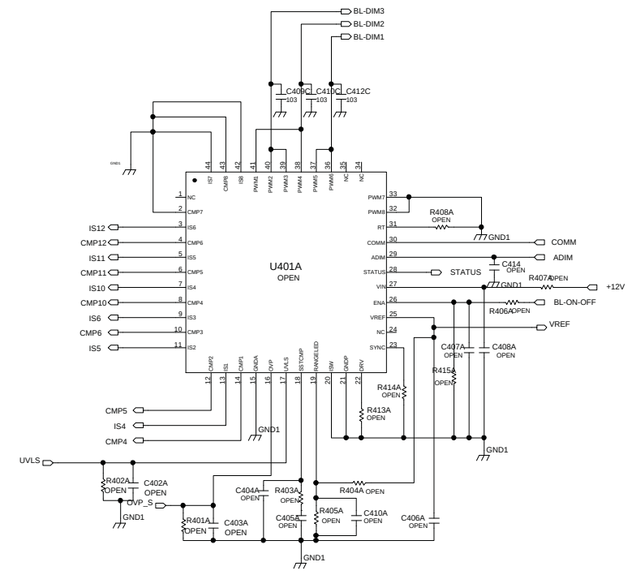

ANALOG DIM

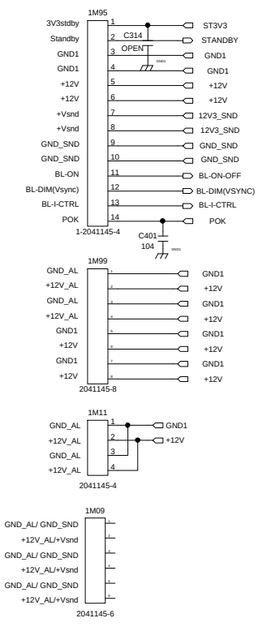

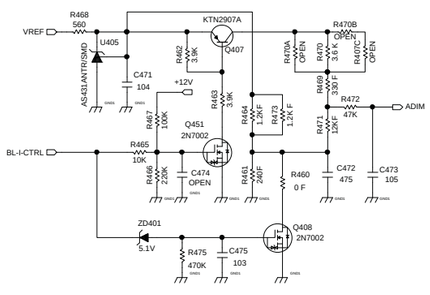

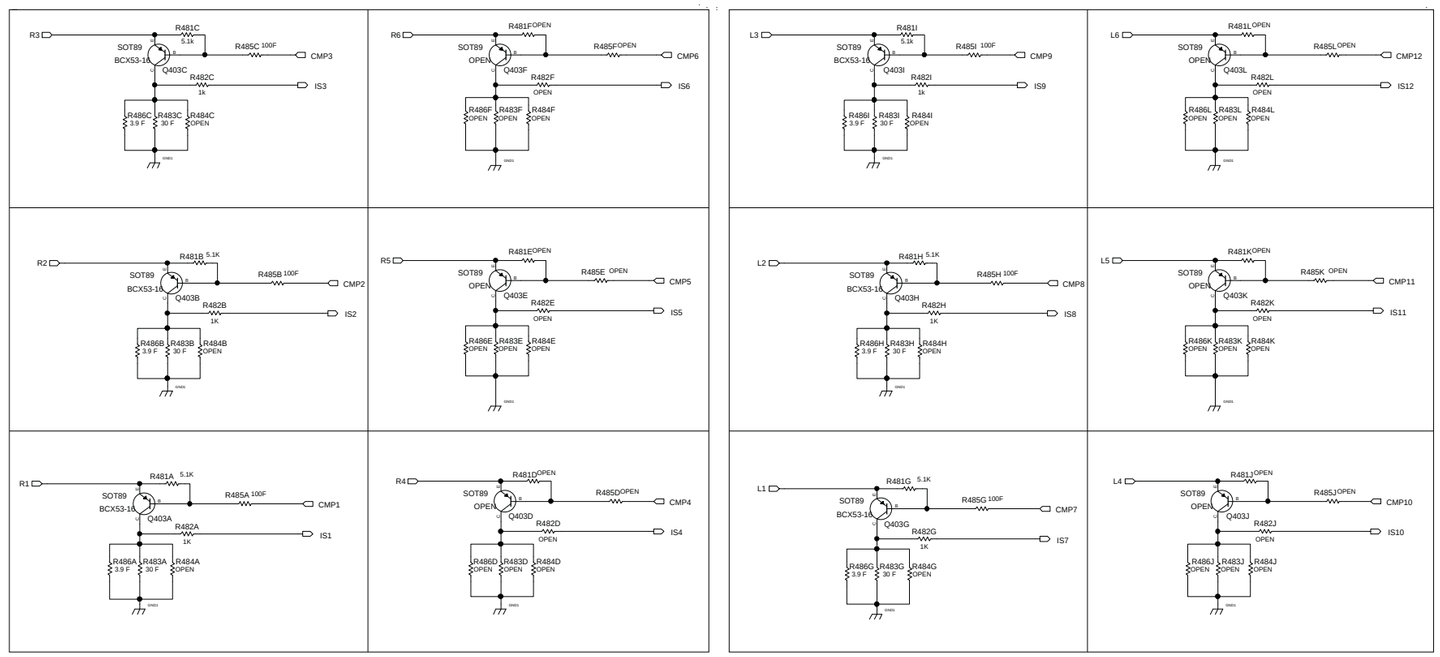

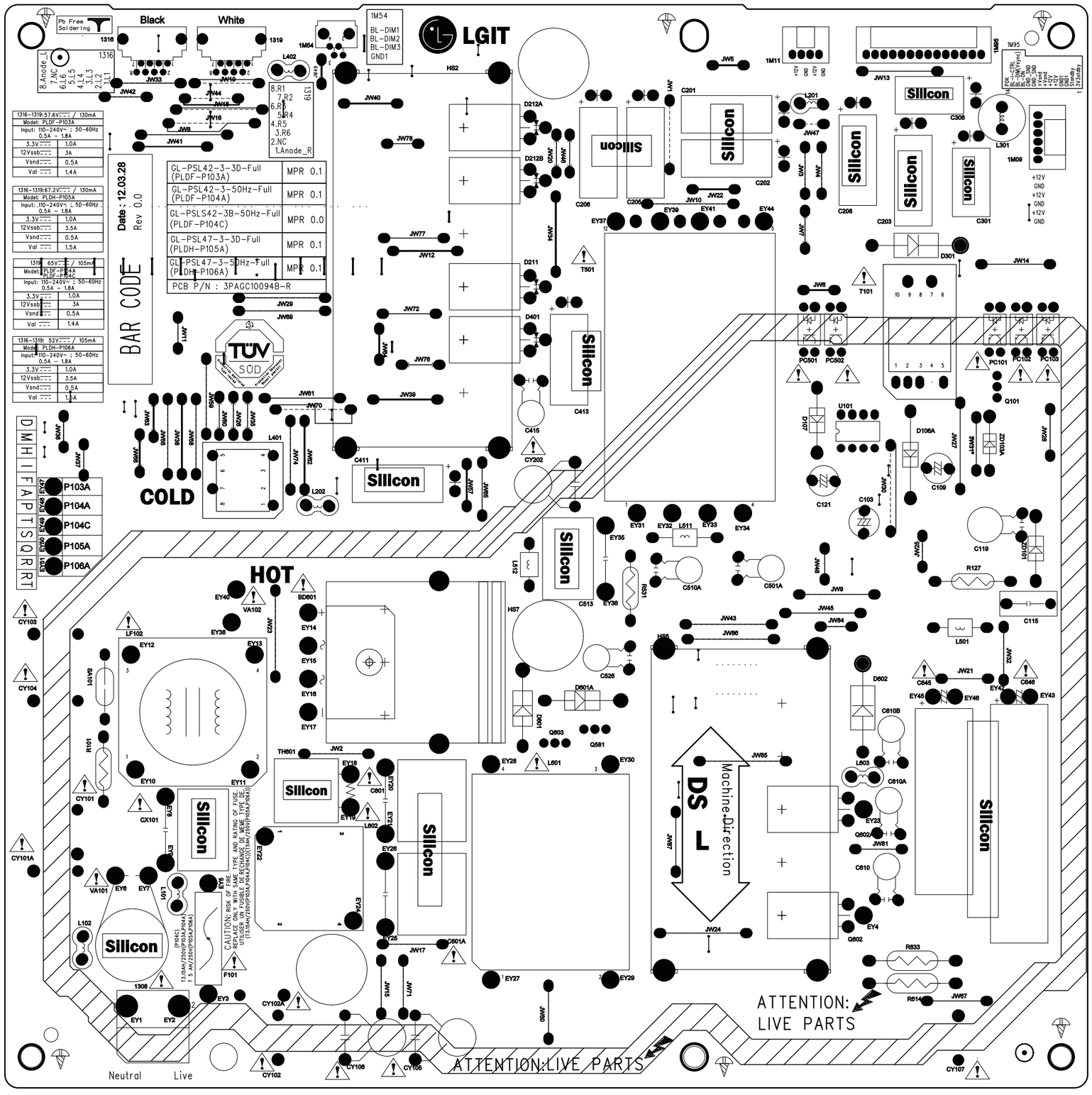
Pb Free Soldering
Black
White
LGIT
1M54
BL-DIM1
BL-DIM2
BL-DIM3
GND1
1M95
PIN 1-CTRL
2-BL-DIM(Pwm)
3-BL-EN
GND
GND
+Vled
+Vled
+12V
+12V
GND1
GND1
Standby
3.3V(1W)
1316:57.6V⎓ / 130mA
Model: PLDF-P103A
Input: 110-240V~ : 50-60Hz
0.5A - 1.8A
3.3V⎓ 1.0A
12Vssb⎓ 3A
Vsnd⎓ 0.5A
Vol ⎓ 1.4A
1316-1319:67.2V⎓ / 130mA
Model: PLDH-P105A
Input: 110-240V~ : 50-60Hz
0.5A - 1.8A
3.3V⎓ 1.0A
12Vssb⎓ 3.5A
Vsnd⎓ 0.5A
Vol ⎓ 1.5A
1316: 65V⎓ / 105mA
Model: PLDF-P104A
PLDF-P104C
Input: 110-240V~ : 50-60Hz
0.5A - 1.8A
3.3V⎓ 1.0A
12Vssb⎓ 3A
Vsnd⎓ 0.5A
Vol ⎓ 1.4A
1316-1319: 52V⎓ / 105mA
Model: PLDH-P106A
Input: 110-240V~ : 50-60Hz
0.5A - 1.8A
3.3V⎓ 1.0A
12Vssb⎓ 3.5A
Vsnd⎓ 0.5A
Vol ⎓ 1.5A
BAR CODE
Date : 12.03.28
Rev 0.0
GL-PSL42-3-3D-Full (PLDF-P103A) MPR 0.1
GL-PSL42-3-50Hz-Full (PLDF-P104A) MPR 0.1
GL-PSLS42-3B-50Hz-Full (PLDF-P104C) MPR 0.0
GL-PSL47-3-3D-Full (PLDH-P105A) MPR 0.1
GL-PSL47-3-50Hz-Full (PLDH-P106A) MPR 0.1
PCB P/N : 3PAGC10094B-R
TÜV SÜD
COLD
HOT
P103A
P104A
P104C
P105A
P106A
Silicon
DS L
Machine Direction
CAUTION: RISK OF FIRE. REPLACE ONLY WITH SAME TYPE AND RATING OF FUSE. UTILISER UN FUSIBLE DE RECHANGE DE MÊME TYPE ET (T3.15AH/250V(P103A,P104A,P104C))(T5AH/250V(P105A,P106A))
(P104C) T3.15AH/250V(P103A,P104A) T 5 AH/250V(P105A,P106A)
ATTENTION: LIVE PARTS
ATTENTION:LIVE PARTS
Neutral
Live